K600/4 METER-PULSER

FEATURES

- ADJUSTABLE FLANGES
- INSTANTANEOUS READING
- EXTREMELY ACCURATE
- SUITABLE FOR INDUSTRIAL APPLICATIONS
- IDEAL FOR MOBILE INSTALLATIONS
- LOW ENERGY CONSUMPTION

EN.
The Piusi K600/4 is an oval gear meter suitable for monitoring the delivery of low and medium viscosity oils. Its 4 couples of gears allows to reach high flow rates.

PERFORMANCE

up to 150 L/MIN (up to 39 gpm)	± 0,5 %
FLOW-RATE	ACCURACY
20 BAR	0,2 %
PRESSURE	REPEATABILITY

K600/4

K600/4 pulser

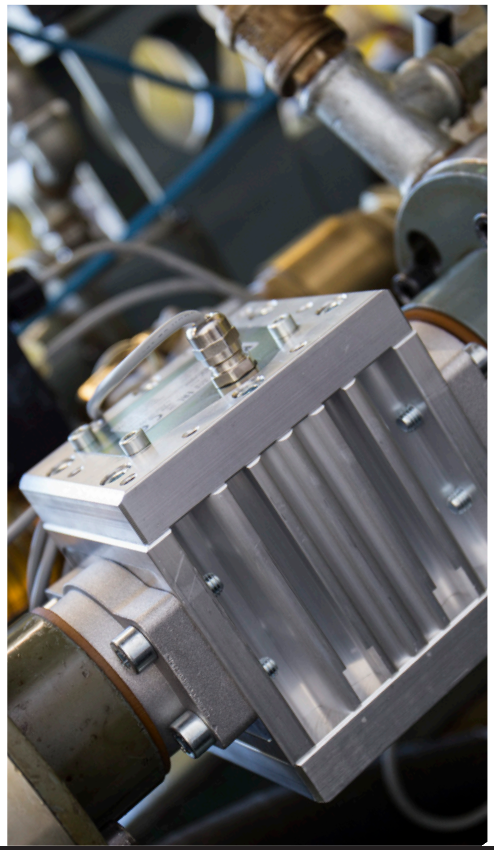

PACKAGING

CODE	WEIGHT		PACKAGING			
	KG	LBS	MM	INCH	PCS/PALLET	PCS/BOX
00049700A	3,2	7	200X120X140	7,9X4,7X5,5		1
000473000	3,2	7	200X120X140	7,9X4,7X5,5		1

PIUSI S.P.A. 46029 SUZZARA (MANTOVA) ITALY - TEL. +39.0376.534561 - www.piusi.com
The Company reserves the right to modify the information contained in this catalogue without any prior notice - REV. 02-2018

A AIR | A ANTIFREEZE | B BIODIESEL | D DIESEL | F FOOD | G GASOLINE | °G GREASE | K KEROSENE | O OIL | U AdBlue® | W WATER | W WINDSCREEN

CHARTS

MEASURING

FLUID	OIL	SAE 80W90
TEMPERATURE	20	°C

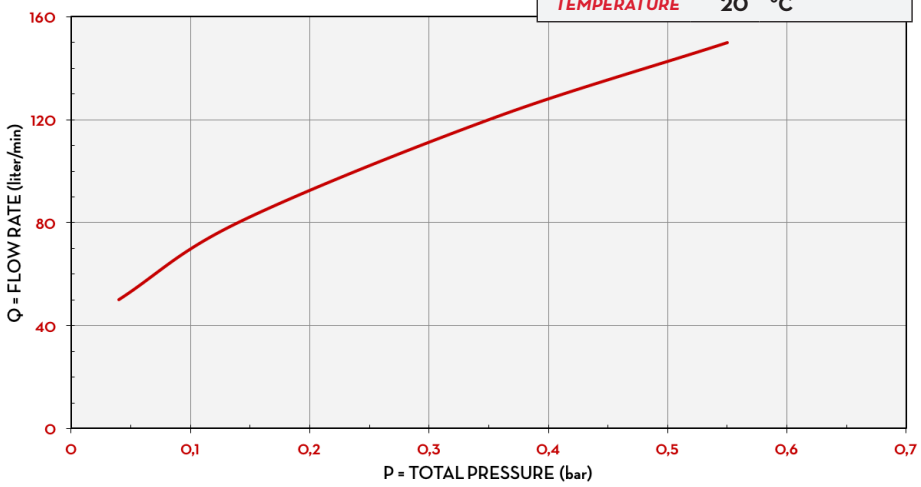

IN THE BOX

- K600/4 METER
- INSTRUCTION MANUAL

DETAILS

RESET/CALIBRATE BUTTON

ALUMINIUM BODY

OVAL GEAR

DIMENSIONS

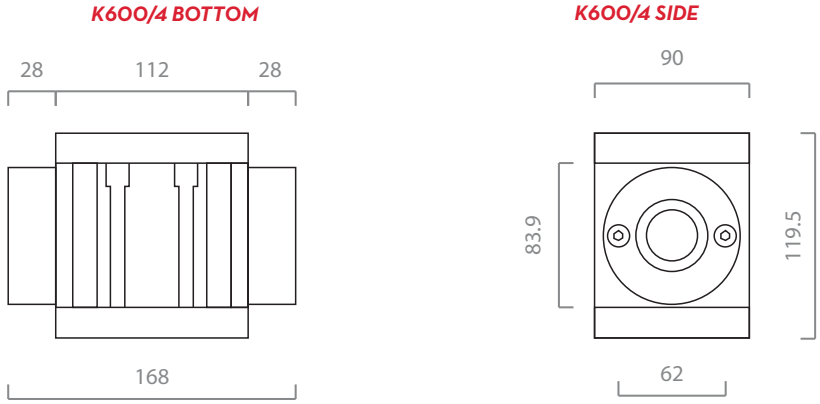

Measures expressed in millimeters

MATERIALS

- BODY: ALUMINIUM
- GEARS: TECHNOPOLYMER

TECHNICAL DATA

CODE	DESCRIPTION	FLUIDS TYPE	FLOW-RATE		PRESSURE		BATTERY INCLUDED	FLANGE	INLET OUTLET	INLET FILTER
			L/MIN	GPM	BAR	PSI	NO. 2 2X1,5V			
00049700A	K600/4	A D O	15 - 150	3,9 - 39	20	284	YES	YES	1 1/2" BSP	YES
000473000	K600/4 PULSER	A D O	15 - 150	3,9 - 39	20	300	NO	YES	1 1/2" NPT	YES

UPON REQUEST AVAILABLE IN NPTF VERSION AND DISPLAY IN GALLON/QUARTER OR PINT